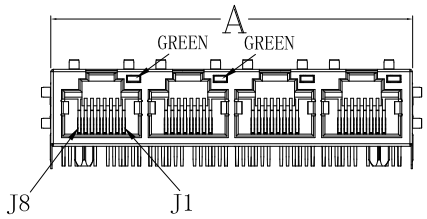

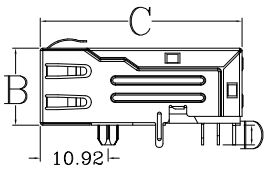

UNIT : mm / inch
A = 58.24 / 2.293
B = 12.40 / 0.488
C = 32.76 / 1.290
D = 3.17 / 0.125

Unless otherwise specified,all dimensions tolerances is ±0.254 / 0.010.

RoHS 2011/65/EU

Notes:

1.CONNECTOR MATERIAL:
HOUSING:THERMOPLASTIC BLACK UL94 V-0
SHIELD:Brass
SHIELD PLATING:NICKEL
CONTACT:PHOSPHOR BRONZE
CONTACT PLATING:SELECTIVE GOLD,30 MICRO-INCHS MIN IN CONTACT AREA
2.PIN NOT ELECTRICALLY CONNECTED MAYBE OMITTED SEE ELECTRICAL DRAWING FOR OMITTED PINS
3.RJ45 CAVITIES CONFORM TO FCC RULES AND REGULATION PART 68.
4.THE PART IS RECOMMENDED FOR WAVE SOLDERING PROCESS PEAK SOLDERING TEMPERATURE IS 260° C MAX,10 SECS MAX
5.OPERATING TEMPERATURE T=-40°C TO +85°C.
6.STORAGE TEMPERATURE T=-40°C TO +85°C.

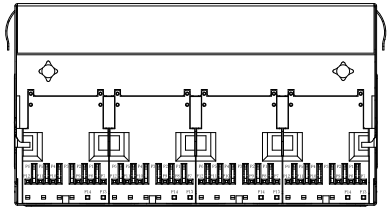

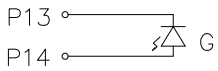

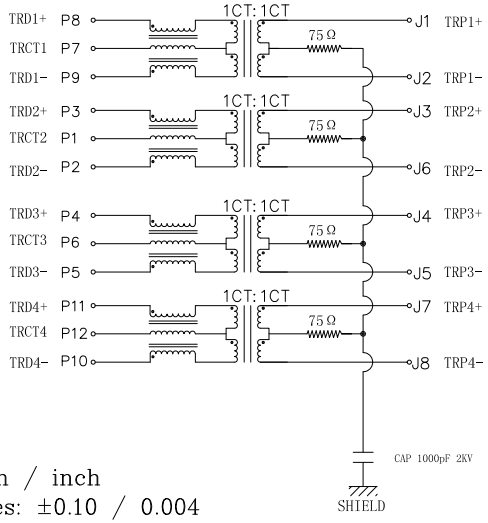

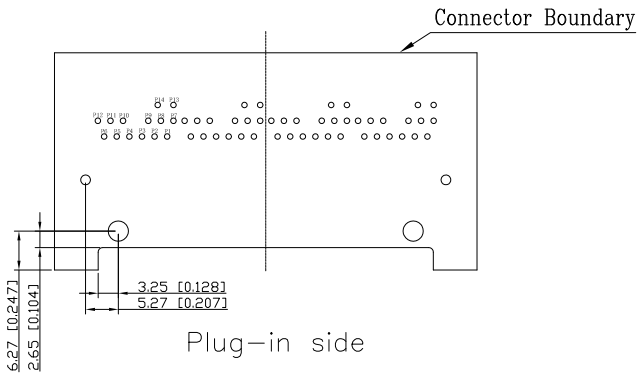

UNIT: mm / inch
Tolerances: ±0.10 / 0.004

Electronical Specifications:

PARAMETER	SPECIFICATIONS		
TURNS RATIO	1.00 ± 2%		
POLARITY	PER SCHEMATIC		
INSERTION LOSS (DATA CHANNELS)	100 KHz	1-400 MHz	
	-3.0 dB MAX	-2.0 dB MAX (-1.4dB TYP)	
RETURN LOSS (Z OUT=100 OHM ±1%)	1-40 MHz	40 MHz-400 MHz	400 MHz-500 MHz
	-16 dB MIN	-16+10LOG(f/40)dB	-6+30LOG(f/400)dB
INDUCTANCE (OCL)	160 uH MIN @ 100 KHz, 100 mV		
CROSSTALK, ADJACENT CHANNELS	1-100 MHz	100-500 MHz	
	-28 dB MIN	-19 dB MIN	
COMMON MODE REJECTION RATIO	1-40 MHz	40-100 MHz	100-500 MHz
	-30 dB MIN	-28 dB MIN	-26 dB MIN
COMMON TO DIFFERENTIAL MODE REJECTION (CDMR)	1-250 MHz	250-500 MHz	
	-30 dB MIN	-22 dB MIN	
HIPOT-OUTPUT ISOLATION	2250 VDC MIN @ 60 SECONDS		

NOTE: f IS FREQUENCY IN MHz.

Recommended PCB Layout (Component Side View)

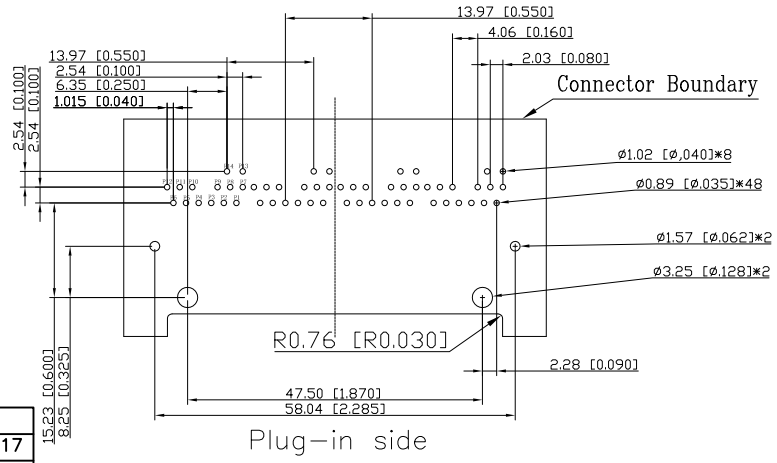

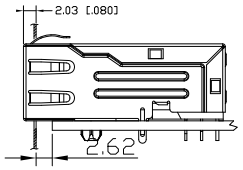

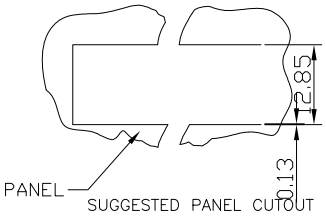

LED SPECIFICATION				
STANDARD LED	WAVELENGTH	Forward Current	Forward V(max)	TYP
GREEN	565nm	20 mA	2.4V	2.2V

PROPRIETARY NOTE:
This document contains confidential information and proprietary to Rego Electronics and shall not be reproduced or disclosed to other documents or used for any purpose other than that for which was obtained without the expressed written consent of Rego Electronics.

.X ± 0.30	APPROVED: Chris	REGO http://www.rego.com.tw	
.XX ± 0.20	CHECKED: Denny		
.XXX± 0.15	DRAWN: Bryan	TITLE: RJ45 WITH 10G BASE T MAGNETICS 4 PORTS JACK	
X° ± 3°	UNITS: mm	SCALE: NONE	PART NO:KJ17S-0694-TGBL
			SHEET: 1 OF 1

REV	DATE
A	24.7.2017